LIONEL® B-56 UNDERPASS STREET BRIDGE

BRIDGE ASSEMBLY

2 ea. 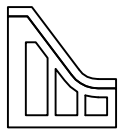

2 ea. 

BRIDGE ABUTMENTS

2 ea. 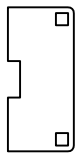

BASE UNITS

2 ea. 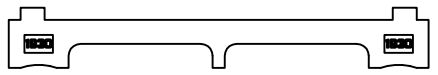

ROADBED SUPPORT BEAM

2 ea. 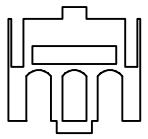

3 ea. 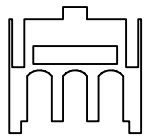

PILLARS

1 ea. 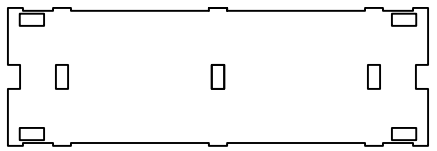

ROADBED

1 ea. 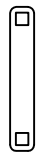

CENTER BASE

2 ea.

BALLAST CURB

NOTE * MAKE SURE YOU HAVE THE PARTS AND QUANTITIES LISTED HERE BEFORE STARTING ASSEMBLY

GENERAL PREPARATION NOTES

- USE SMALL FILE INCLUDED IN KIT TO CLEAN UP ALL TAB & NOTCH INSIDE CORNERS
- TEST FIT ALL PIECES PRIOR TO FINAL ASSEMBLY
- USE FINE GRIT SANDPAPER TO REMOVE ANY ROUGH EDGES OF PARTS BEFORE ASSEMBLY
- USE CARPENTERS WOOD GLUE TO ATTACH PIECES TOGETHER

1 USE GLUE TO ATTACH BRIDGE END PILLARS TO BASE UNITS USING TABS & NOTCHES TO ALIGN

REPEAT PROCESS WITH REMAINING INTERIOR BRIDGE PILLARS USING GLUE TO ATTACH PILLARS TO BASE UNITS USING TABS & NOTCHES TO ALIGN PILLARS

ROADBED CAN BE USED WITHOUT GLUE TO SQUARE UP PIECES WHILE GLUE DRIES

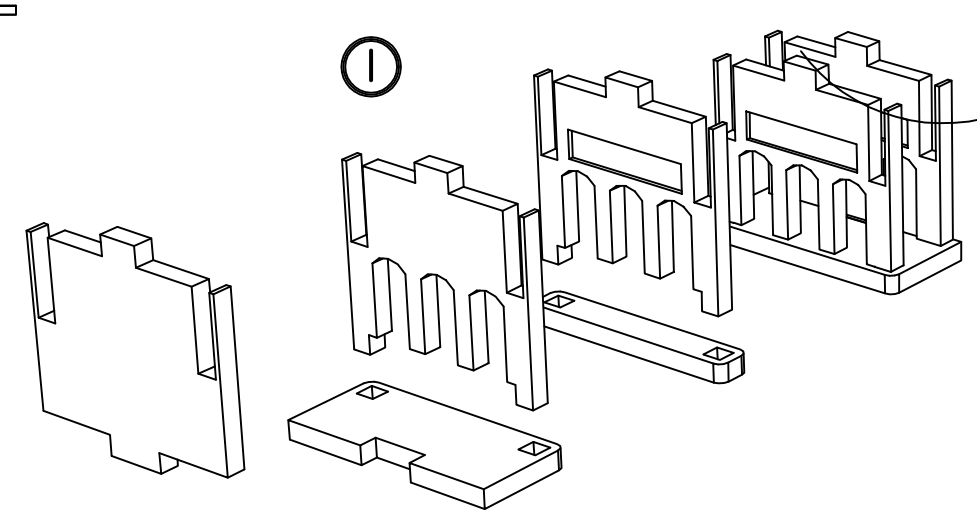

NOTE DIRECTION OF RECESSED PANEL

2 AFTER FILING TO ENSURE FIT BRUSH GLUE INTO SLOTS & INSERT ROAD BED SUPPORT BEAMS INTO PILLAR SLOTS

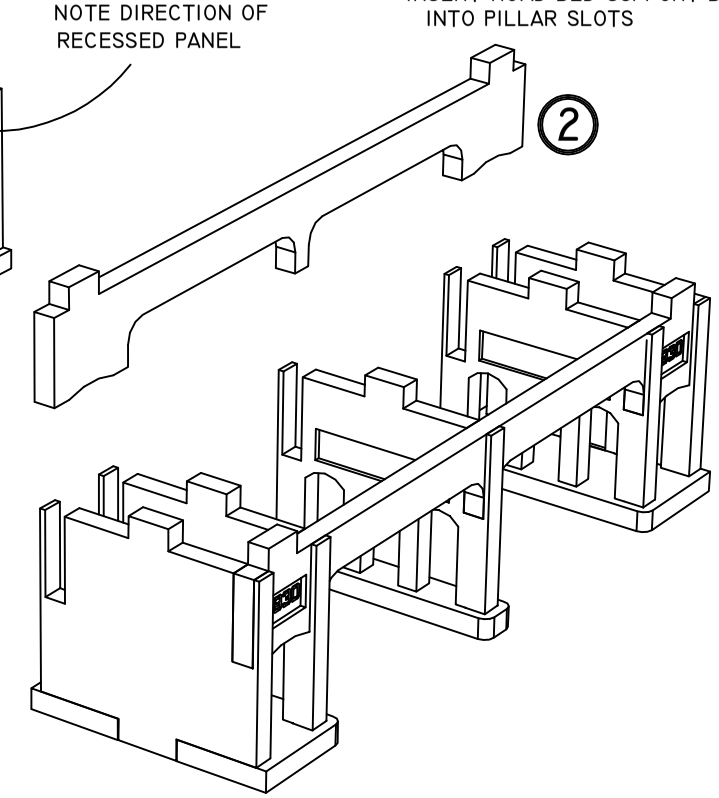

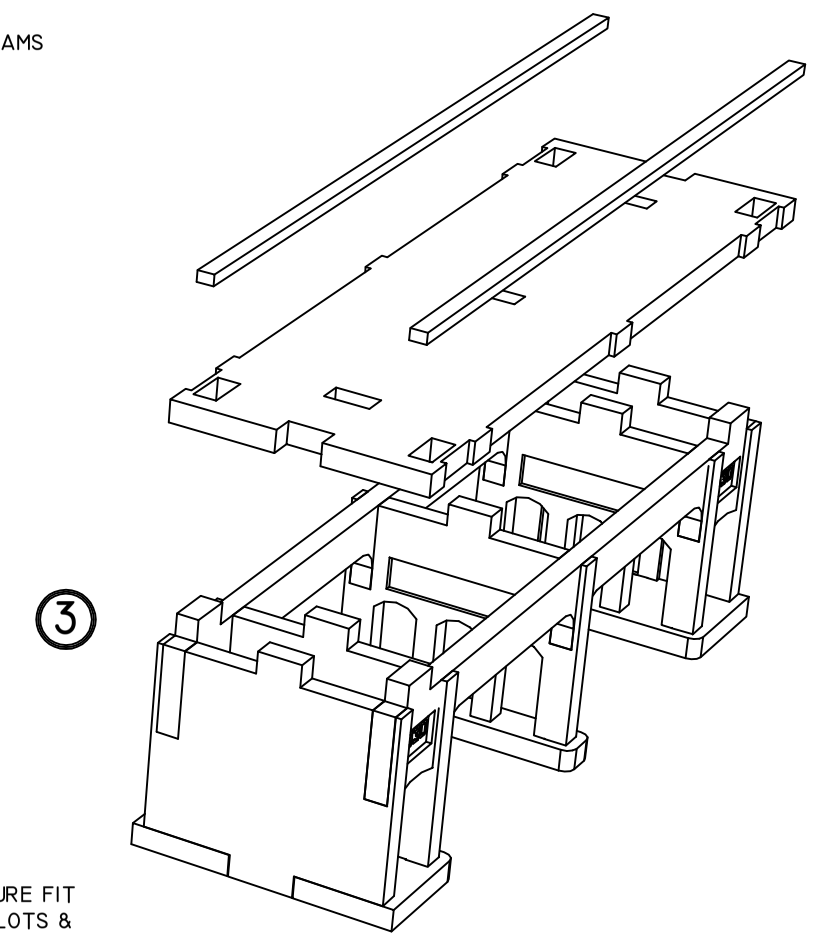

3 AFTER FILING TO ENSURE FIT BRUSH GLUE INTO SLOTS & INSERT ROAD BED INTO PILLAR SLOTS PLACE & GLUE BALLAST RETAILERS OVER PILLAR SLOTS AS ILLUSTRATED

ASSEMBLED BRIDGE

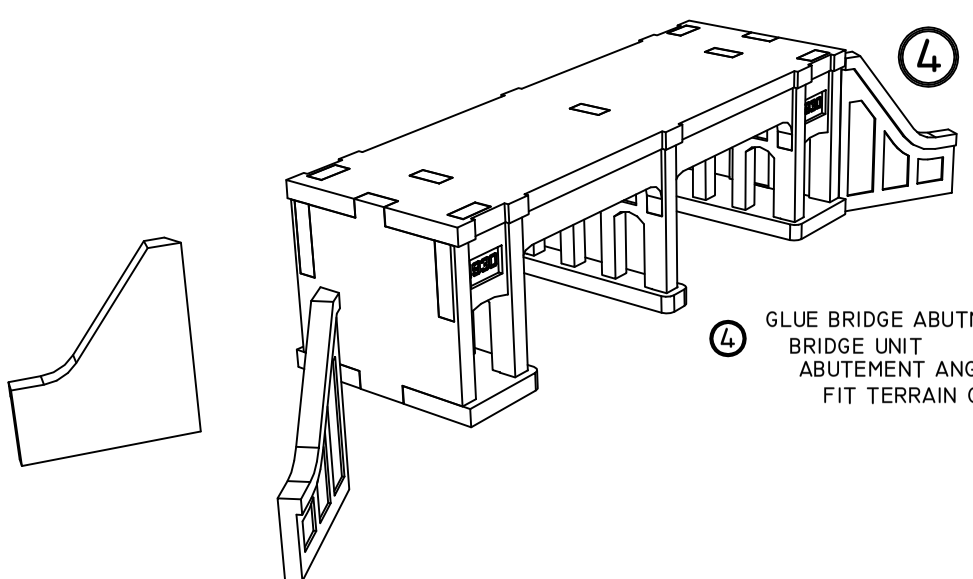

4 GLUE BRIDGE ABUTMENTS TO ENDS OF BRIDGE UNIT ABUTEMENT ANGLE MAY BE ALTERED TO FIT TERRAIN OF YOUR LAYOUT

T W TRAINWORX
2808 McGOWAN STREET
DALLAS, TX 75203
214 - 634 - 2965